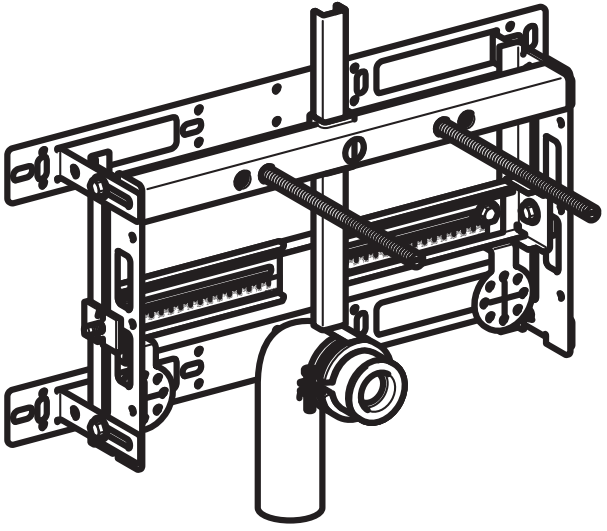

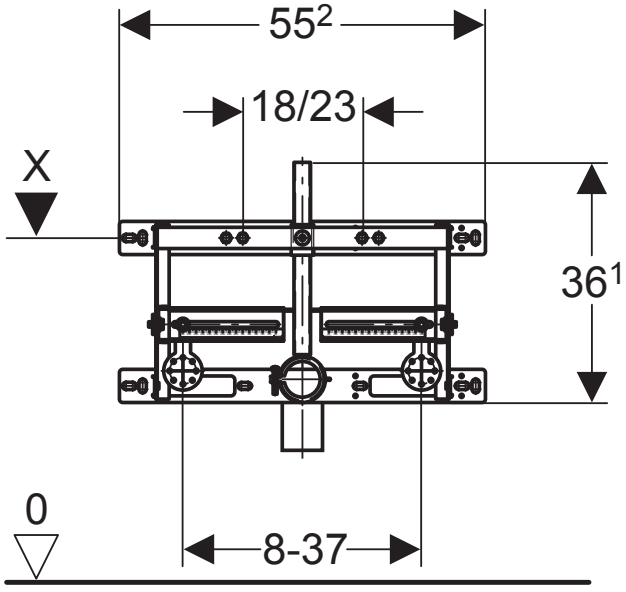
55²
18/23
X
36¹
0
8-37

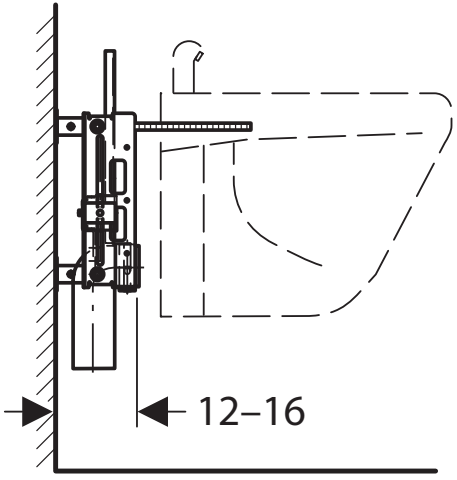
12–16