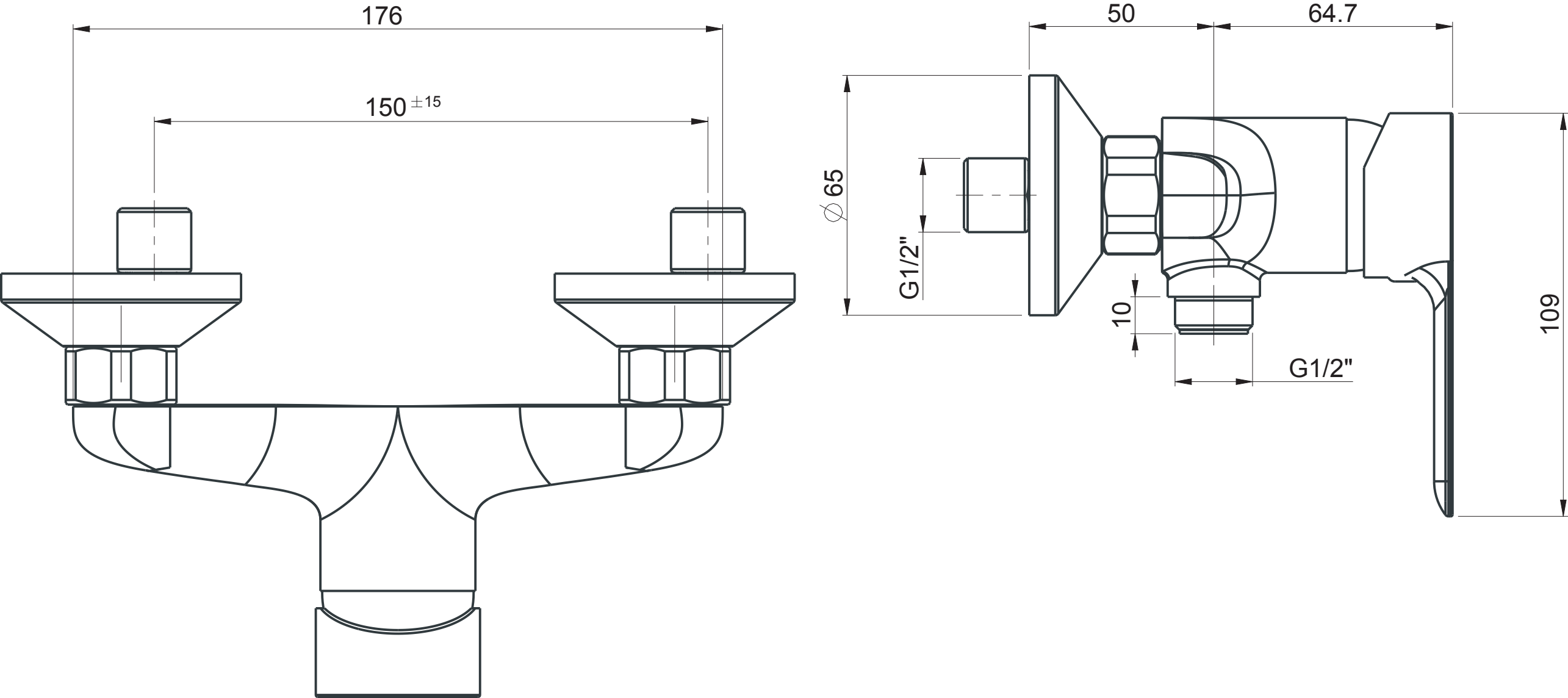
176
150 ±15
50
64.7
∅65
G1/2"
10
G1/2"
109